IRL

MV Feeder Protection Relay

Making the Smart Grid real

Compact **Feeder Multifunction** solution for MV switchgears.

Load Shedding Function to ensure the stability of the system.

Protection system for **Grounded** or **Ungrounded** schemes.

- ✓ Phase & Ground Overcurrent Protection (3x50/51 + 50N/51N).
- ✓ Sensitive Ground Overcurrent Protection (50Ns/51Ns).
- ✓ Negative Sequence Overcurrent Protection (50Q/51Q).
- ✓ Directional Units (3x67 + 67N + 67Q + 67Ns).
- ✓ Ground Overcurrent Protection Schemes (85-67N/67Q).
- ✓ Neutral (Ungrounded/Petersen Coil) Overcurrent Protection.
- ✓ Voltage Dependent Phase Overcurrent Protection (3x51V).
- ✓ Undervoltage Units (3x27).
- ✓ Overvoltage Units (3x59).
- ✓ Ground Overvoltage Unit (1x59N).
- ✓ Underfrequency (81m), Overfrequency (81M) and Rate of Change (81ROC) Protection.
- ✓ Breaker Failure Function (50/62BF).
- ✓ Synchronism Check Unit (25).
- ✓ Three-Phase Recloser (79).
- ✓ Local Control.
- ✓ Programmable Logic.
- ✓ Supervision of the Switching Circuits.
- ✓ Breaker Monitoring.
- ✓ Time Synchronization.
- ✓ Fault Reporting.
- ✓ Oscillographic Register.
- ✓ DC Power Monitoring.
- ✓ Self-Test Program.

SMART GRID Solutions by

Application

IRL relay model provides **Protection, Control and Measurement functions** for a great range of applications: MV feeders, machine bays (motors, transformers and generators) or back-up in HV lines.

This device is available for installation in **Grounded or Ungrounded systems** featuring a long list of protection functions, such as: Directional and Non-Directional Overcurrent, Over/Under Voltage, Over/Under Frequency, Recloser and others as shown in the diagram.

Additionally **IRL** includes other features commonly required in MV networks: Breaker Failure, Trip Coil Supervision, Synchro-Check, Power Reverse Detection and Thermal Image.

The built-in control logic module allows the implementation of **Load-Shedding Schemes** so typical in MV networks as well as any other kind of automatism like load transfer logics, etc.

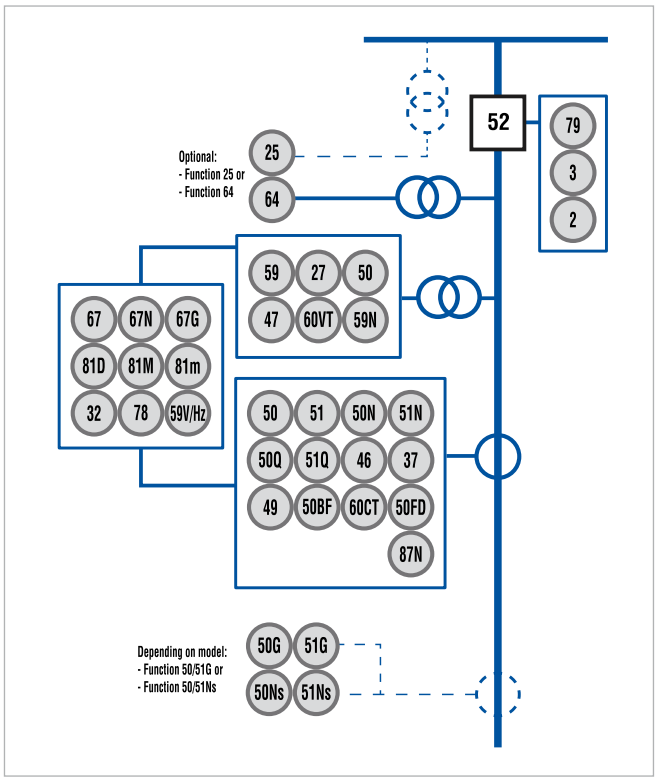

Physical Description

1. **Programmable LED targets**. 8 programmable LEDs and 1 non-configurable LED for relay "In Service" indication.
2. **Alphanumeric Display**. 128 x 64 matrix display.
3. **Keypad**. 7 push-buttons to control the information displayed, such as measures, events, fault indications, I/Os status, etc.
4. **Control Push Buttons**. 3 push-buttons to either control the breaker, change the active setting group or enable/disable any protection function.
5. **Local Communication Port**. 1 x USB front port for local communication with the relay.

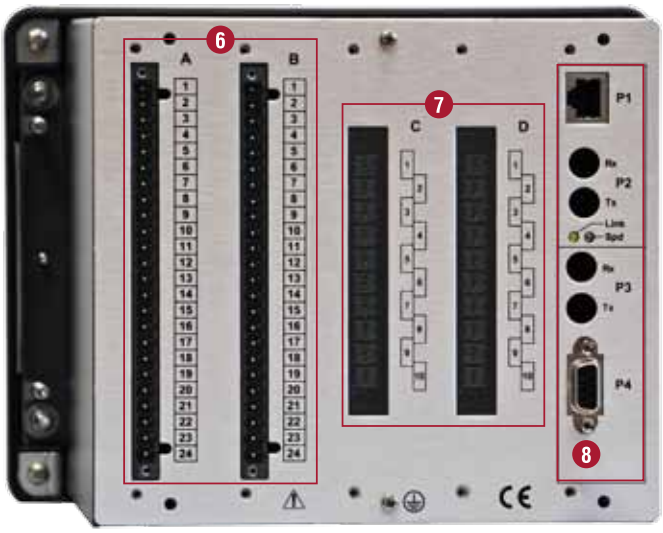

6. **Digital I/Os**. 24-pin terminal blocks for digital I/Os, transducer inputs, trip and close contacts and power supply connection [Slots A & B].
7. **Analog Inputs**. 10-ring lug terminal blocks for current and voltage inputs [Slots C & D].
8. **Remote Communications Ports**. Multiple options available depending on model selection: RS232/ RS485, Glass FO (ST) and Ethernet (RJ45 or Multimode Glass FO ST) [Slot E].

Spain Headquarters: Parque Científico y Tecnológico de Bizkaia, 210 - 48170 Zamudio, Bizkaia - t: +34 944 522 003 · f: +34 944 522 140
Brazil · India · Ireland · France · UK · Mexico · Singapore · USA · Dubai · Indonesia
Please visit our website for local contact information in your area: www.ziv.es